AH102A

Medium Power, High Linearity Amplifier

The Communications Edge ™

Product Information

Product Features

- 350 – 3000 MHz
- +46 dBm Output IP3
- 14 dB Gain
- +27 dBm P1dB
- MTTF > 1000 Years
- Internally Matched
- Single +9 V Supply
- Lead-free/Green/RoHS-compliant SOT-89 Package

Applications

- Mobile Infrastructure
- W-LAN / ISM / WLL / RFID
- Defense / Homeland Security
- Fixed Wireless

Product Description

The AH102A is a medium power gain block that offers excellent dynamic range in a low-cost surface mount package. The combination of a single supply voltage and an internally matched device makes it ideal for both narrow and broadband applications.

Superior thermal design allows the product to achieve +46 dBm IP3 performance at a mounting temperature of +85°C with an associated MTTF of greater than 1000 years. The AH102A is available in both the standard SOT-89 package and the environmentally-friendly lead-free/green/RoHS-compliant and green SOT-89 package.

The broadband amplifier uses a high reliability GaAs MMIC technology and is targeted for applications where high linearity is required. It is well suited for various current and next generation wireless technologies such as GPRS, GSM, CDMA, and W-CDMA. In addition, the AH102A will work for other applications within the 250 to 3000 MHz frequency range such as fixed wireless.

Functional Diagram

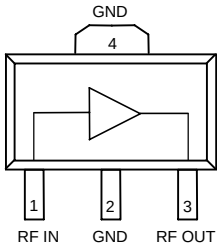

Function	Pin No.
Input	1
Ground	2
Output / Bias	3
Ground	4

Specifications (1)

Parameter	Units	Min	Typ	Max
Operational Bandwidth	MHz	350		3000
Test Frequency	MHz		800	
Gain	dB	12.5	13.9	
Output IP3 (2)	dBm	+43	+46	
Output P1dB	dBm		+27	
Noise Figure	dB		3.1	
Test Frequency			1900	
Gain (3)	dB		13.6	
Output IP3 (2)	dBm	+42	+44.5	
Output P1dB	dBm		+27	
Operating Current Range	mA	170	200	230
Supply Voltage	V		+9	

1. Test conditions unless otherwise noted: T = 25ºC, Vdd = +9 V in a 50 ohm test fixture.
2. OIP3 is measured with two tones at an output power of +8 dBm/tone separated by 10 MHz. The suppression on the largest IM3 product is used to calculate the OIP3 using a 2:1 rule.

Typical Performance (3)

Parameter	Units	Typical		
Frequency	MHz	900	1900	2140
S21	dB	13.9	13.6	13.5
S11	dB	-25	-16	-18
S22	dB	-24	-18	-16
Output P1dB	dBm	+27	+27	+27
Output IP3 (2)	dBm	+46	+45	+44
IS-95A Ch. Power @ -45 dBc ACPR	dBm	+21	+20	
W-CDMA Ch. Power @ -45 dBc ACLR	dBm			+17.5
Noise Figure	dB	3.1	3.6	3.6
Supply Current	mA		200	
Supply Voltage	V		+9	

3. Parameters reflect performance in an AH102A application circuit, as shown on page 3 and 4.

Absolute Maximum Rating

Parameter	Rating
Operating Case Temperature	-40 to +85 °C
Storage Temperature	-55 to +150 °C
DC Voltage	+11 V
RF Input Power (continuous)	+17 dBm
Junction Temperature	220 °C

Operation of this device above any of these parameters may cause permanent damage.

Ordering Information

Part No.	Description
AH102A	Med. Power High Linearity Amplifier (leaded SOT-89 Pkg)
AH102A-G	Med. Power High Linearity Amplifier (lead-free/green/RoHS-compliant SOT-89 Pkg)
AH102A-PCB900	900 MHz Fully Assembled Evaluation Board
AH102A-PCB2000	1.7-2.2 GHz Fully Assembled Evaluation Board

Specifications and information are subject to change without notice

Typical Device Data

V_{DS} = +9 V, I_{DS} = 200 mA, T = 25°C, unmatched 50 ohm system

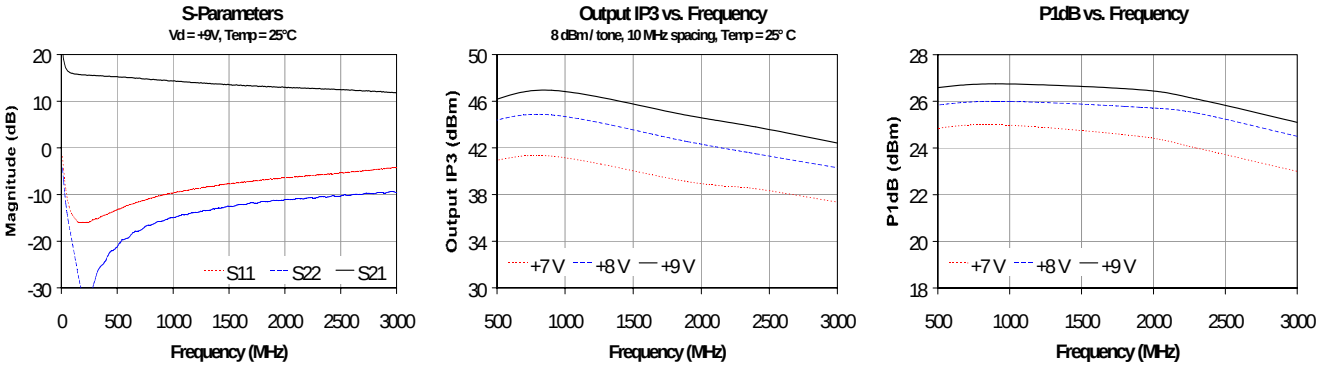

S-Parameters (V_{DS} = +9 V, I_{DS} = 200 mA, T = 25°C, unmatched 50 ohm system, calibrated to device leads)

Freq (MHz)	S11 (dB)	S11 (ang)	S21 (dB)	S21 (ang)	S12 (dB)	S12 (ang)	S22 (dB)	S22 (ang)
50	-10.19	-66.48	16.46	160.67	-19.41	15.79	-13.28	-69.56
100	-14.04	-71.41	15.68	163.59	-19.07	5.08	-19.88	-71.25
200	-15.67	-79.10	15.34	160.66	-19.08	-3.61	-29.80	-38.04
400	-14.07	-97.48	15.02	148.77	-19.27	-14.37	-23.70	34.75
600	-12.12	-113.94	14.70	135.85	-19.48	-22.56	-19.10	29.71
800	-10.61	-127.09	14.27	123.45	-19.78	-30.44	-16.36	19.97
1000	-9.47	-138.73	13.96	111.72	-20.13	-38.62	-14.69	8.48
1200	-8.58	-149.08	13.61	100.37	-20.55	-44.96	-13.56	-3.22
1400	-7.89	-158.25	13.26	88.70	-21.08	-51.77	-12.63	-14.58
1600	-7.14	-166.18	13.03	77.43	-21.52	-58.63	-11.72	-27.27
1800	-6.64	-172.45	12.77	66.67	-22.13	-65.69	-11.06	-40.07
2000	-6.13	-179.39	12.54	55.51	-22.80	-71.76	-10.54	-53.12
2200	-5.70	173.53	12.32	43.95	-23.48	-78.11	-10.14	-66.67
2400	-5.41	167.42	12.05	32.42	-24.28	-84.66	-9.81	-80.60
2600	-4.94	160.55	11.81	19.98	-25.56	-91.79	-9.39	-94.18
2800	-4.43	154.64	11.52	7.65	-26.67	-97.19	-9.15	-108.42
3000	-4.00	148.29	11.17	-4.87	-28.01	-102.70	-8.85	-121.96

Application Circuit PC Board Layout

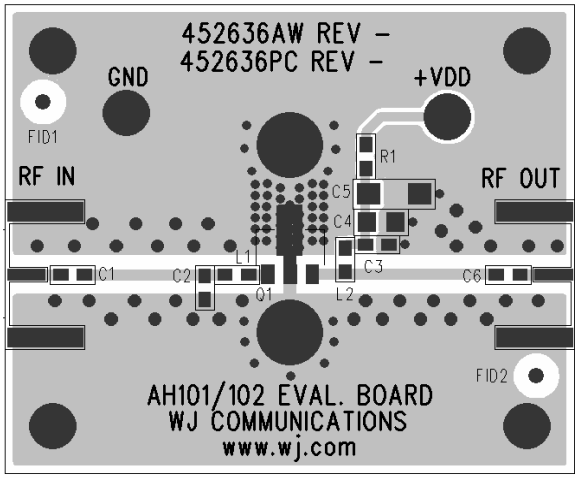

Circuit Board Material: .014" Getek (ε_r=4.2), four layer, 1 oz copper
Microstrip line details: width = .026", spacing = .026"

Application Circuit: 900 MHz (AH102A-PCB900)

Typical RF Performance at 25°C

Frequency	900 MHz
S21 - Gain	13.9 dBm
S11	-25 dB
S22	-24 dB
Output P1dB	+27 dBm
Output IP3	+46 dBm
IS-95A Ch. Power @ -45 dBc ACPR	+21 dBm
Noise Figure	3.1 dB
Supply Voltage	+9 V
Supply Current	200 mA

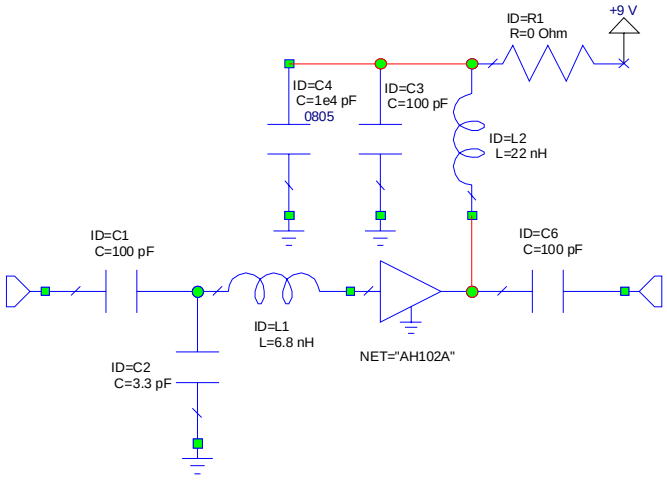

Notes:
1. The amplifier should be connected directly to a +9 V regulator; no dropping resistor is required.
2. If no DC signal is present at the input (pin 1), C1 can be removed. The gate (input pin) is internally grounded in the amplifier.
3. R1 is used as a placeholder for a different application circuit. It can be removed from the circuit.
3. Component sizes are 0603 unless otherwise noted.

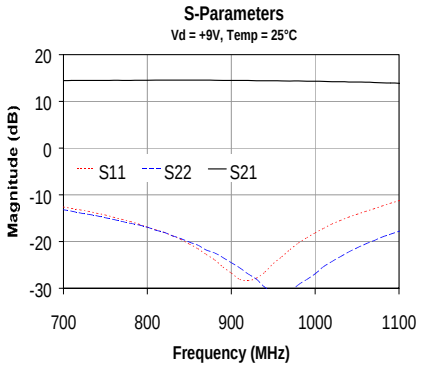

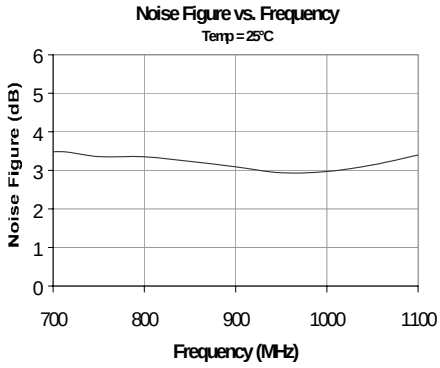

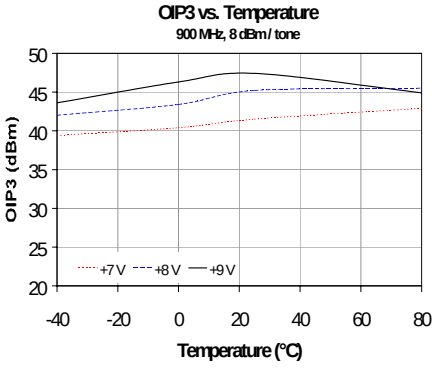

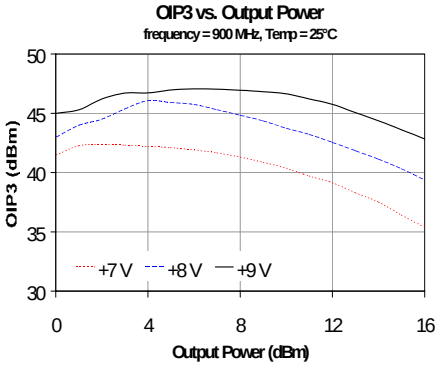

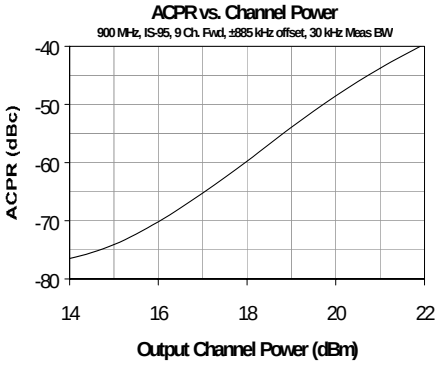

Application Circuit: 1900 / 2140 MHz (AH102A-PCB2000)

Typical RF Performance at 25°C

Frequency	1900	2140	Units
S21 - Gain	13.6	13.5	dB
S11	-16	-18	dB
S22	-18	-16	dB
Output P1dB	+27	+27	dBm
Output IP3	+45	+44	dBm
IS-95A Ch. Power @ -45 dBc ACPR	+20		dBm
W-CDMA Ch. Power @ -45 dBc ACLR		+17.5	dBm
Noise Figure	3.6	3.6	dB
Supply Voltage	+9		V
Supply Current	200		mA

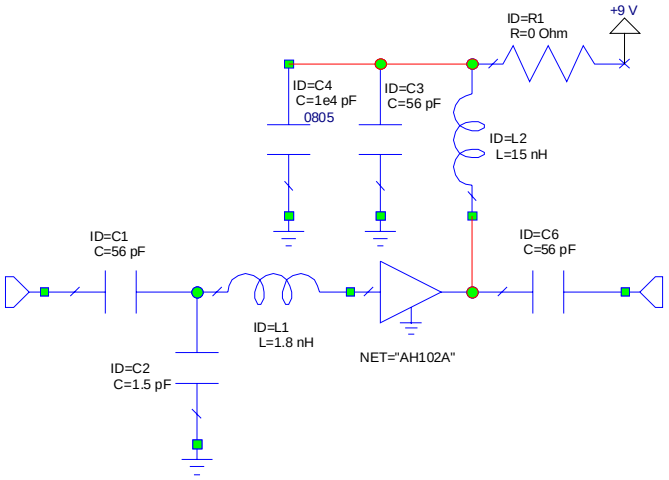

Notes:
1. The amplifier should be connected directly to a +9 V regulator; no dropping resistor is required.
2. If no DC signal is present at the input (pin 1), C1 can be removed. The gate (input pin) is internally grounded in the amplifier.
3. R1 is used as a placeholder for a different application circuit. It can be removed from the circuit.
4. Component sizes are 0603 unless otherwise noted.

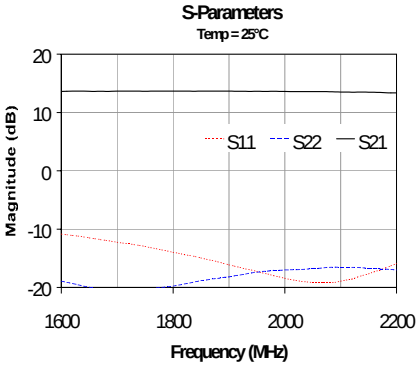

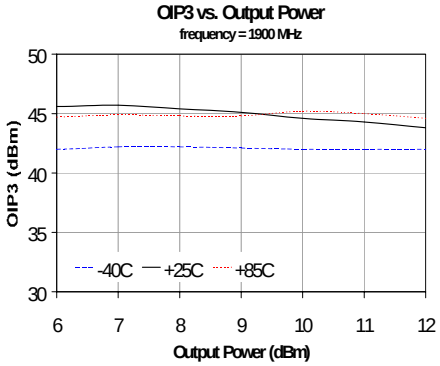

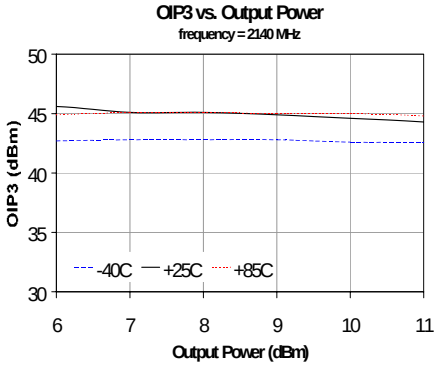

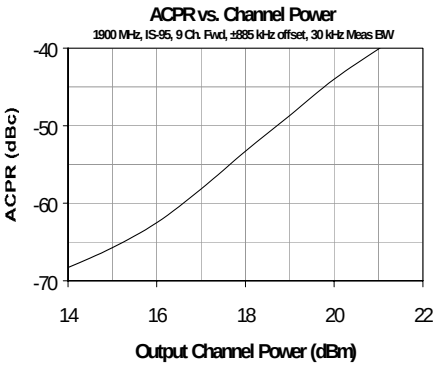

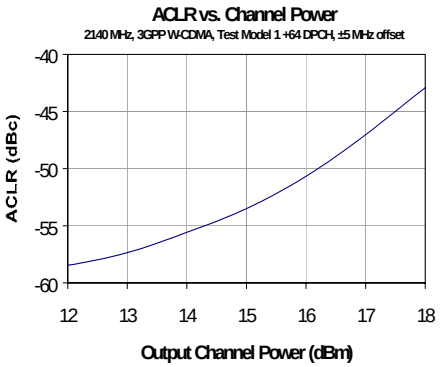

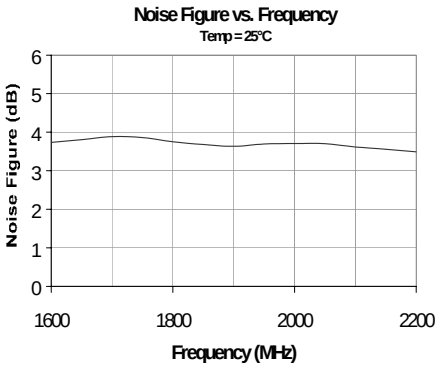

AH102A (SOT-89 Package) Mechanical Information

This package may contain lead-bearing materials. The plating material on the leads is SnPb.

Outline Drawing

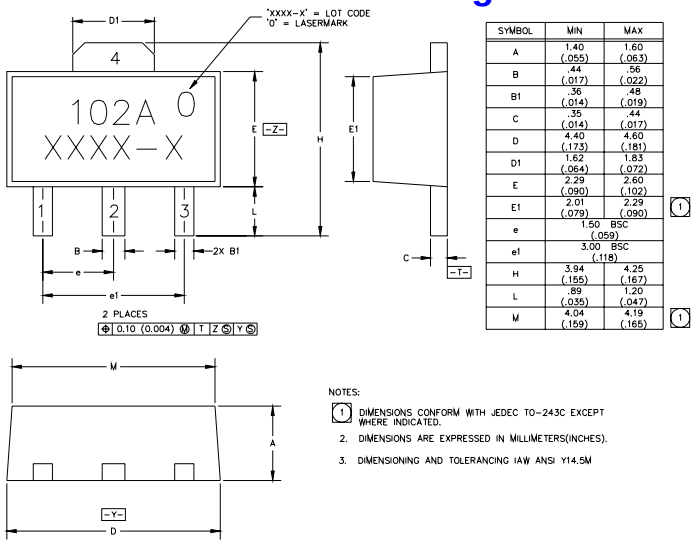

SYMBOL	MIN	MAX
A	1.40 (.055)	1.60 (.063)
B	.44 (.017)	.56 (.022)
B1	.36 (.014)	.48 (.019)
C	.35 (.014)	.44 (.017)
D	4.40 (.173)	4.60 (.181)
D1	1.62 (.064)	1.83 (.072)
E	2.29 (.090)	2.60 (.102)
E1	2.01 (.079)	2.29 (.090)
e	1.50 BSC (.059)	
e1	3.00 BSC (.118)	
H	3.94 (.155)	4.25 (.167)
L	.89 (.035)	1.20 (.047)
M	4.04 (.159)	4.19 (.165)

Land Pattern

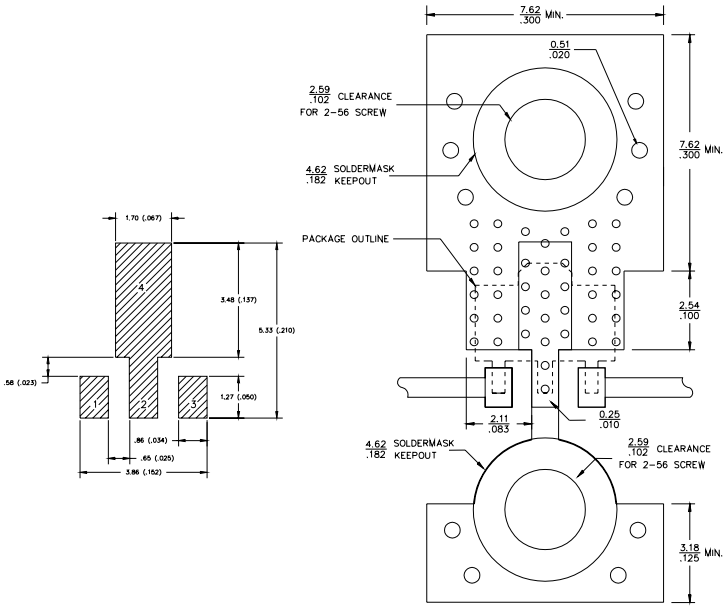

Thermal Specifications

Parameter	Rating
Operating Case Temperature	-40 to +85° C
Thermal Resistance, Rth (1)	25° C / W
Junction Temperature, Tjc (2)	130° C

1. The thermal resistance is referenced from the hottest part of the junction to the ground tab (pin 4).
2. This corresponds to the typical biasing condition of +9V, 200 mA at an 85° C case temperature. A minimum MTTF of 1 million hours is achieved for junction temperatures below 160° C.

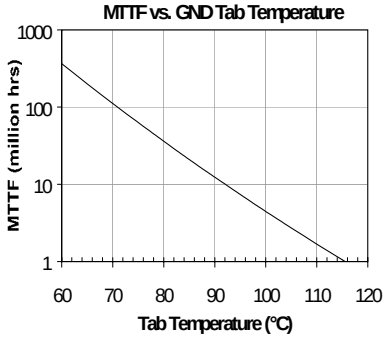

Product Marking

The AH102A will be marked with an "AH102A" designator. An alphanumeric lot code ("XXXX-X") is also marked below the part designator on the top surface of the package. A "0" will be lasermarked in the upper right-hand corner.

Tape and reel specifications for this part are located on the website in the "Application Notes" section.

MSL / ESD Rating

Caution! ESD sensitive device.

ESD Rating: Class 1C
Value: Passes ≥ 1000V min.
Test: Human Body Model (HBM)
Standard: JEDEC Standard JESD22-A114

ESD Rating: Class IV
Value: Passes ≥ 1000V min.
Test: Charged Device Model (CDM)
Standard: JEDEC Standard JESD22-C101

MSL Rating: Level 3 at +235° C convection reflow
Standard: JEDEC Standard J-STD-020

Mounting Config. Notes

1. Ground / thermal vias are critical for the proper performance of this device. Vias should use a .35mm (#80 / .0135") diameter drill and have a final plated thru diameter of .25 mm (.010").
2. Add as much copper as possible to inner and outer layers near the part to ensure optimal thermal performance.
3. Mounting screws can be added near the part to fasten the board to a heatsink. Ensure that the ground / thermal via region contacts the heatsink.
4. Do not put solder mask on the backside of the PC board in the region where the board contacts the heatsink.
5. RF trace width depends upon the PC board material and construction.
6. Use 1 oz. Copper minimum.
7. All dimensions are in millimeters (inches). Angles are in degrees.

AH102A-G (Green / Lead-free SOT-89 Package) Mechanical Information

This package is lead-free/Green/RoHS-compliant. It is compatible with both lead-free (maximum 260°C reflow temperature) and leaded (maximum 245°C reflow temperature) soldering processes. The plating material on the leads is NiPdAu.

Outline Drawing

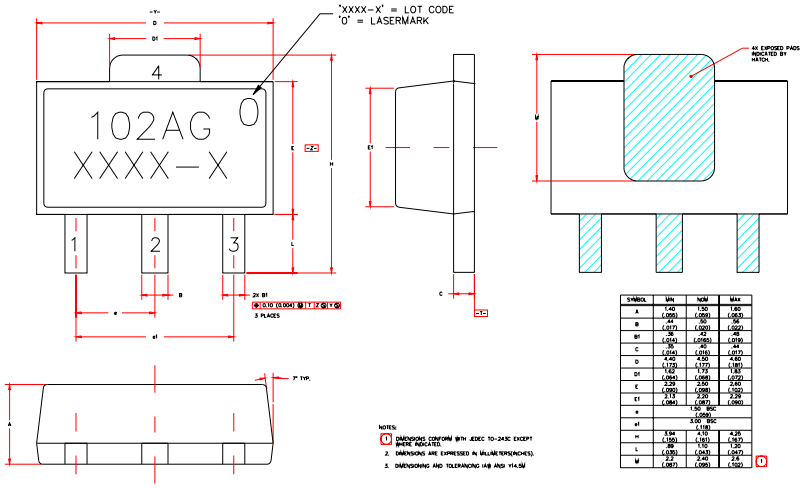

Land Pattern

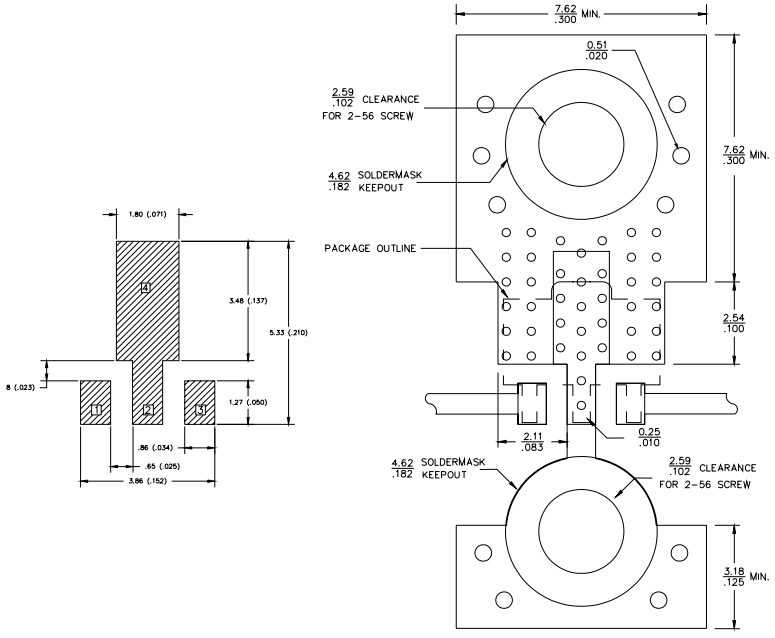

Product Marking

The AH102A-G will be marked with an "102AG" designator. An alphanumeric lot code ("XXXX-X") is also marked below the part designator on the top surface of the package. A "0" will be lasermarked in the upper right-hand corner.

Tape and reel specifications for this part are located on the website in the "Application Notes" section.

MSL / ESD Rating

Caution! ESD sensitive device.

ESD Rating:	Class 1C
Value:	Passes ≥ 1000V min.
Test:	Human Body Model (HBM)
Standard:	JEDEC Standard JESD22-A114
ESD Rating:	Class IV
Value:	Passes ≥ 1000V min.
Test:	Charged Device Model (CDM)
Standard:	JEDEC Standard JESD22-C101
MSL Rating:	Level 3 at +260° C convection reflow
Standard:	JEDEC Standard J-STD-020

Mounting Config. Notes

1. Ground / thermal vias are critical for the proper performance of this device. Vias should use a .35mm (#80 / .0135") diameter drill and have a final plated thru diameter of .25 mm (.010").
2. Add as much copper as possible to inner and outer layers near the part to ensure optimal thermal performance.
3. Mounting screws can be added near the part to fasten the board to a heatsink. Ensure that the ground / thermal via region contacts the heatsink.
4. Do not put solder mask on the backside of the PC board in the region where the board contacts the heatsink.
5. RF trace width depends upon the PC board material and construction.
6. Use 1 oz. Copper minimum.
7. All dimensions are in millimeters (inches). Angles are in degrees.

Thermal Specifications

Parameter	Rating
Operating Case Temperature	-40 to +85° C
Thermal Resistance, Rth (1)	25° C / W
Junction Temperature, Tjc (2)	130° C

1. The thermal resistance is referenced from the hottest part of the junction to the ground tab (pin 4).
2. This corresponds to the typical biasing condition of +9V, 200 mA at an 85° C case temperature. A minimum MTTF of 1 million hours is achieved for junction temperatures below 160° C.

