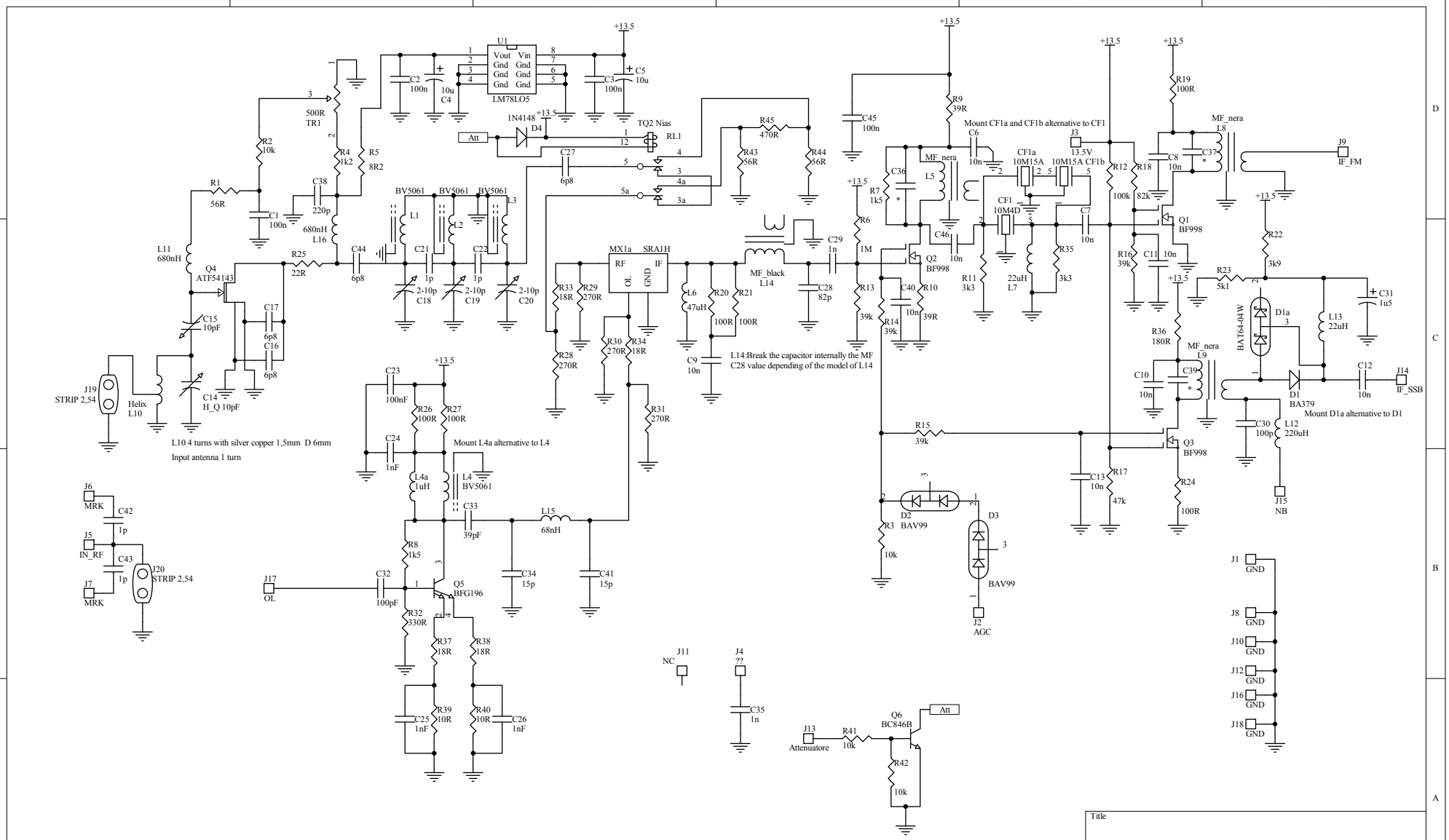

Title		
Size B	Number	Revision
Date: 29-Mar-2010	Sheet of	
File: D:\iz4beh\FT225 frontend\new version\Front end.Ddb	Drawn By:	