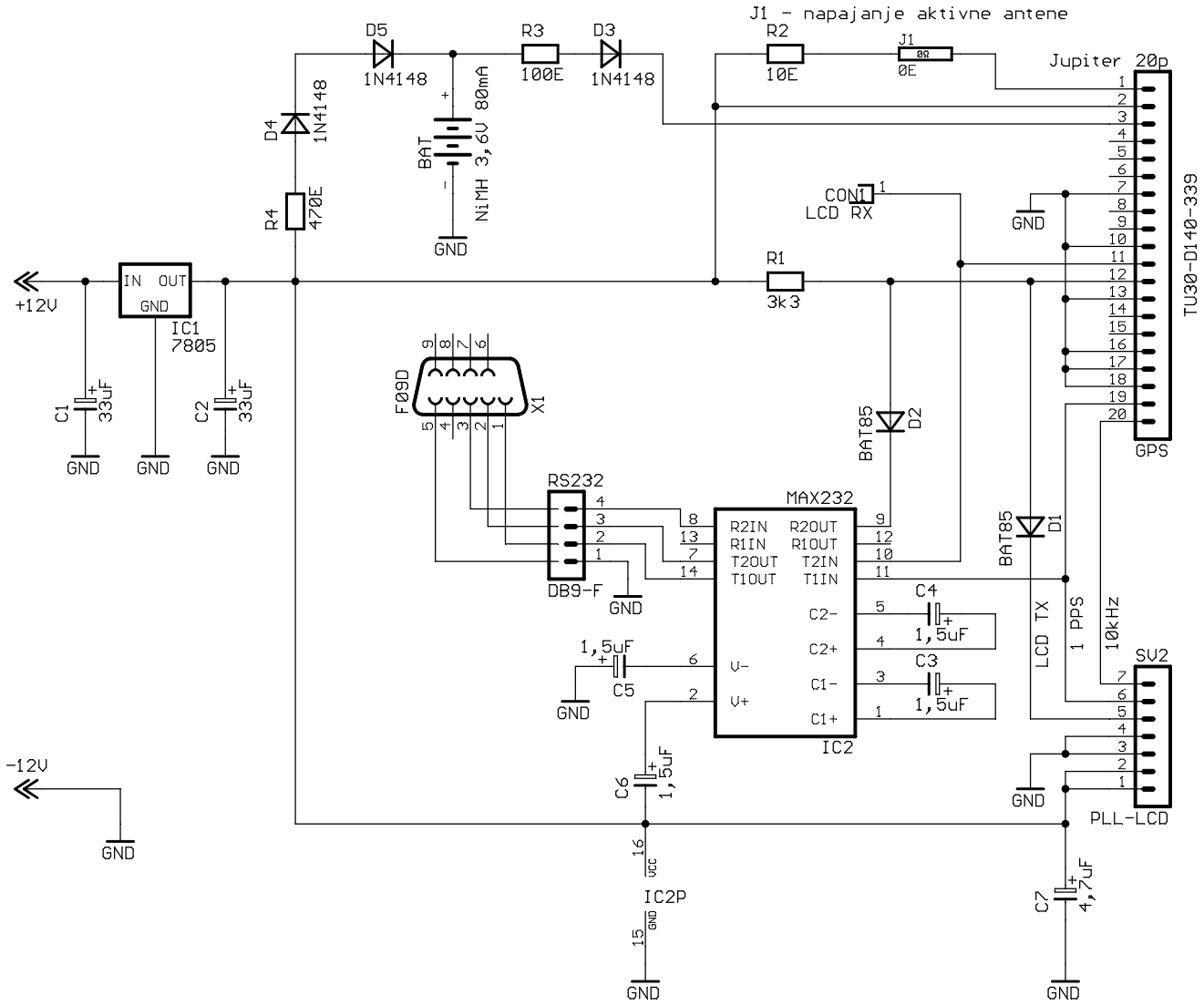

TITLE: GPS Jupiter baza	
Document Number:	REV:
Date: 27.05.2009 17:26:34	Sheet: 1/1